fig.: Klima-Set01
ZR-IF01 + SM230AX-SR

Interface ZR-IF01 Power- / Signal-Converter and Klima-Set01

Adaptation of "new" type SM230ASR or SM230AX-SR * ACTUATORS to a control loop with "old" SM220-SR drives
Housing: 85 x 85 x 52 mm, IP54

The combination of interface ZR-IF01 and drive SM230AX-SR can be used as a replacement for a defective SM220-SR. This makes Belimo SM230ASR actuatorss backward compatible with the "old" SM220-SR.

The interface ZR-IF01 was developed to enable the integration of new Belimo actuators in old systems with SM220-SR actuator. If an SM220-SR fails, the ZR-IF01 interface enables the use of an SM230AX-SR or SM230ASR.
The integrated power and signal converter mirrors the auxiliary supply and the signals of the new actuator in the control loop with the actuators SM220-SR.
The ZR-IF01 can also be used if several SM220-SR are interconnected in one control loop.

*** For runtime-dependent control circuits or parallel connection of several SM220-SRs we recommend the use of the SM230AX-SR with 90 sec. Running time. This is also part of our Klima-Set01.**

Technical Data ZR-IF01

Electrical	Power supply mains voltage loop	24 V from actuator SM230ASR (SM230AX-SR*) 230 Vac in/out, Only loop - Not necessary for the function!
Converter	Voltage converter Signal converter U (control) Signal converter I (feedback)	24 Vdc in 9 Vdc 7,5...1,5 Vdc in 0(2)...10 Vdc 0(2)...10 Vdc in 0...100µA
Safety	Protection type / class EMC CE conformity Ambient temperature ambient conditions Permitted relative humidity	IP66 / III (SELV) without mains voltage loop! EN 55011:2011-04, 55011-103:2013-02 according to 2014/30/EU operation 0...50 °C; storage -10...+70 °C normally air polluted max. 95% RH, no condansation
Mechanical	Connection technology Housing Weight	screw terminal 2,5 mm² PP 85 x 85 x 50 mm (grau), with mounting bracket ca. 125 g

Product features

Application	The interface allows the use of a SM230ASR in case of failure of an SM220-SR. The integrated power and signal converter mirrors the auxiliary supply and the signals of the SM230ASR into the control circuit with SM220-SR.
Power supply	24 V from SM230ASR (oder LM.., NM..), 230 V without function – loop only!

Order information

Item number	Variant
ZR-IF01	Interface Power / Signalconverter SM230ASR (SM230AX-SR*)
Klima-Set 01	ZR-IF01 with SM230AX-SR (actuator - 90 sec.; Runtime compatible with SM220-SR!)
Z-SMA	Extension floor plate **SM..A** auf **SM**, to compensate for the lengths new / old actuator

Connection diagram

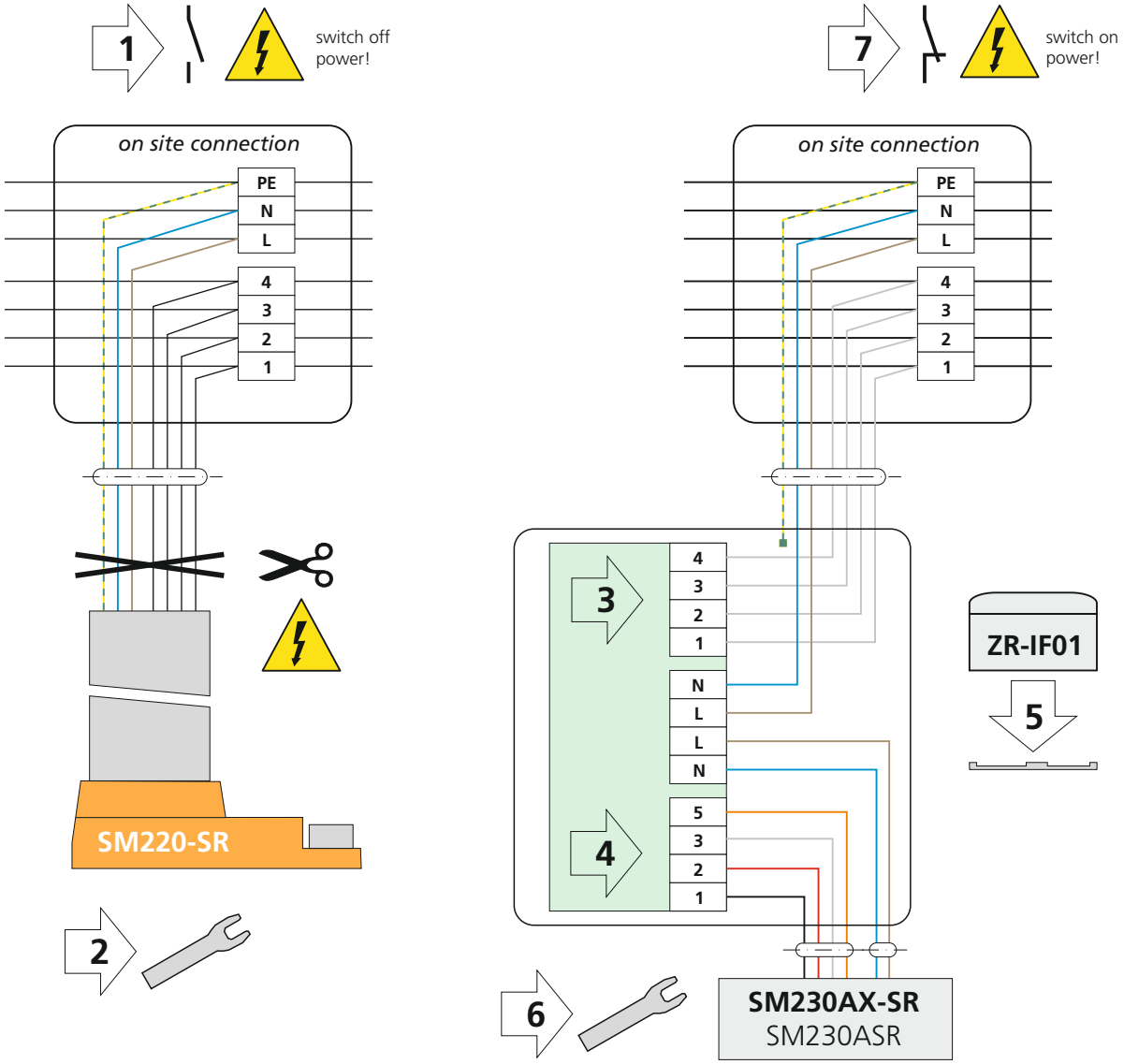

*** For runtime-dependent control circuits or parallel connection of several SM220-SRs we recommend the use of the SM230AX-SR with 90 sec. Running time.**

Installation recommendations
Attention: The connection may only be carried out by qualified electricians!

In case of a breakdown of an actuator SM220-SR the following steps have to be carried out:

1. **switch of power supply (all-pole mains separation)!**
2. **Disconnect the SM220-SR and remove it. (possibly cut off cable)**
   Attention! Cut the motor cable only after disconnection and with special care (cable carries 230 Vac!).
   Interface has no grounding (wire green / yellow!).
3. Connect the cable from the distribution box to the interface (terminal designation as SM220-SR).
4. Connect SM230AX-SR to the interface (terminal designation as SM230ASR).
5. Mount interface with enclosed mounting bracket
6. Mount SM230AX-SR.
7. Restart system and **check function.**